PRODUCT DIMENSIONS

PRESTIGE
AWPR 120-300

RAL 9005

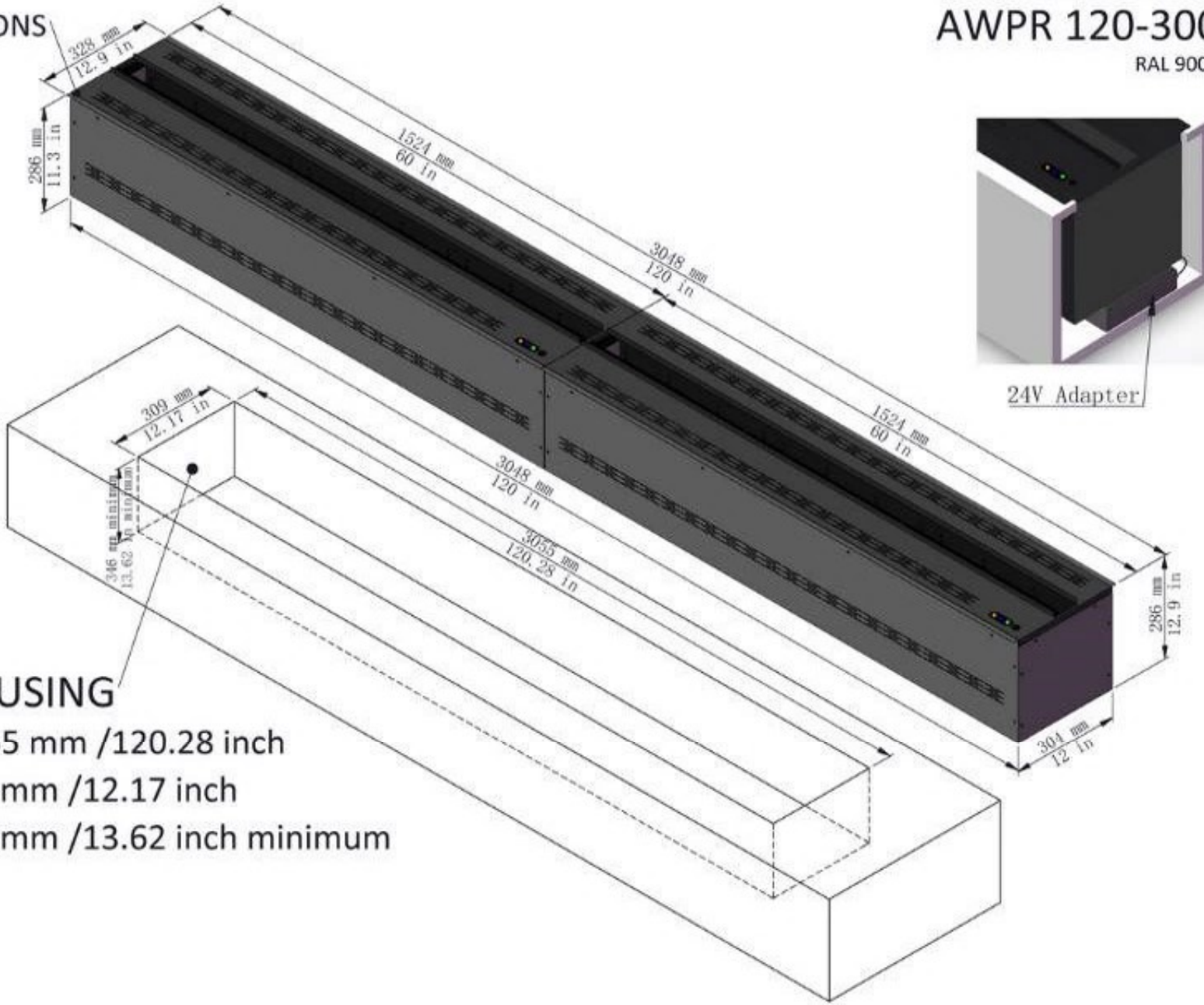

HOUSING

Length: 3055 mm /120.28 inch

Width: 309 mm /12.17 inch

Depth: 346 mm /13.62 inch minimum

A|Fire Design